Product

STADSING
Clean Knowledge. Safe Solutions.

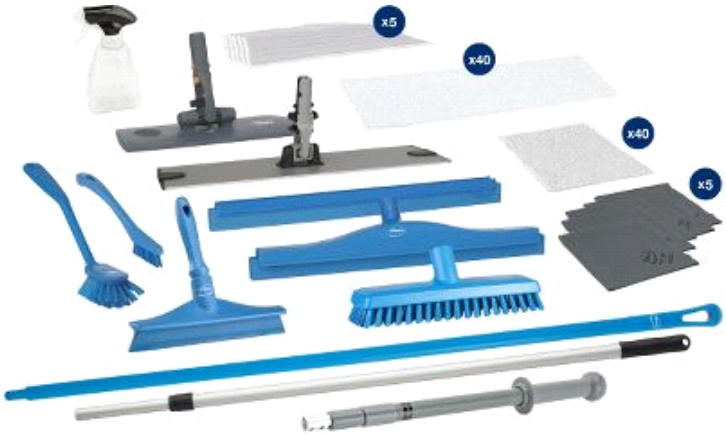

SKU: 39304